Specification sheet

XG+ 450

FAN 6X2 Rigid

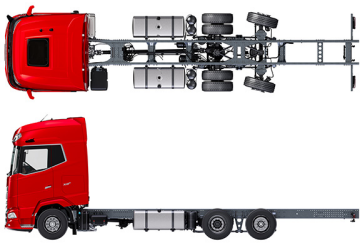

ENGINES
XG+ NewGen 450 MX-11 (330 kW / 449 hp)
XG+ NewGen 430 MX-13 (315 kW / 428 hp)
XG+ NewGen 480 MX-13 (355 kW / 483 hp)
XG+ NewGen 530 MX-13 (390 kW / 530 hp)

GVM[1)]	GCM[2)]
26000 kg	44000 kg
Max. front 8000 kg	
Max. rear 19000 kg	

016F0329NBAA - 202545A - 10-07-2025

DAF Trucks Ltd, UK, Haddenham, HP17 8LJ, www.daf.co.uk

CAB EXTERIOR

Luxurious cab for XG+ series, with unrivalled aerodynamics for fuel efficient driving and low CO2 emissions. The huge and deep frontscreen, curved at the sides, and the large side windows offer an unsurpassed direct view for the driver, to enhance road safety. The cab interior is extremely comfortable for driving, living and sleeping with unprecedented spaciousness and practical layout. Cab length: 2690 mm; cab width: 2500 mm. Number of cab entrance steps: 3.; Cab suspension air; LED head, cornering and fog lights; Front view mirror.

Optional

02941 Chassis front execution: bottom plate
02889 Chassis front execution: no bottom plate
03358 External sun visor
01015 LED Skylights; aux. LED lights on cab rf, prepared
01925 Two LED work lamps for cab rear wall
01891 Hazard beacons on cab front, prepared
06629 Two hazard beacon lights
03232 Front windscreen with solar control foil
01550 No front view mirror
01358 No DAF Digital Vision System
01913 DAF Corner View

AERODYNAMICS

Optional

03846 No roof air deflector
01581 Adj. roof air deflector; over 4 m (!) for XG+ cab
04906 Side collars, one side hinged
03074 Side collars, both sides hinged

COLOURS

Cab colour E1980 Crystal White; Chassis colour grey.; Colour of bumper: Crystal White.

CAB INTERIOR

Cab interior trim colour: Exclusive; Dashboard finish: Plateau; Cab interior decoration: Argenta; Driver seat: Luxury Air; Arm rest at both sides of the driver seat; Co-driver seat: cinema + table; fabric cover; Dashboard table; Storage compartment with drawer in centre; Upper bunk; Automatic Cab Climate Control; Auxiliary cab heater (water); Roof hatch, electric control.

Optional

02043 Dashboard finish: Vision
02350 Cab interior decoration: Natura
07736 Driver seat: Super Air
07737 Driver seat: Xtra Leather Air
02241 Driver seat, swivel base
04050 Refrigerator and drawer
04069 Two refrigerators
02854 Xtra Comfort mattress for lower bunk
02858 Xtra Comfort mattress for adjustable lower bunk
01775 Xtra Comfort mattress with topper for lower bunk
02380 Mattress for DAF Relax Bed
04150 Mattress with topper for DAF Relax Bed
01967 Park air conditioning, integrated

COMMUNICATION AND DRIVING MANAGEMENT

PACCAR Connect; Tachograph digital, Stoneridge version G2V2A; Speed limiter setting 85/90 km/h; Adaptive Cruise Control with FCW and AEBS-3; Driver Performance Assistant.

Optional

09681 Preparation for Maut
03470 Infotainment incl. DAF Truck Nav. and tablet prep.
03684 Infotainment including DAF Truck Navigation

SAFETY AND SECURITY

DAF drowsiness detection; Lane Departure Warning System; Vehicle Stability Control (VSC); Basic engine immobiliser system.

Optional

08631 Air bag (driver) and 2 seat belt tensioners
02569 No Driver State Monitoring
03628 DAF drowsiness & distraction detection
00795 Safety regulations EC ADR
01952 No DAF Side/Turn Assist

SUSPENSION AND AXLES

Front: 8.00 t, parabolic, 163N; Rear axle load 13.00 t; Rear: 20.00 t, air suspension, SR1344; Trailing axle load 8.0t; Lifting device.

Optional

06257 Front axle load 9.00 t
06095 Front axle load 10.00 t
04647 Front springs air
04057 Rear axle HR1356
04588 Rear axle SR1347
08191 Axle load monitoring

WHEELS AND TYRES

Driven rear axle(s): 315/70R22.5; F1,315/70R22.5GO EQMSU 158/150 L Steering ABA 3P; R1,315/70R22.5GO EQMDU 154/150 L Traction ABB 3P; R2,315/70R22.5GO EQMSU 158/150 L Steering ABA 3P.

Optional

16152 Tyre makes and types

DRIVELINE

Engine MX-11, multi torque 6 cylinder diesel engine, 10.8 litres. Output 330 kW (449 hp) at 1600 rpm. Maximum torque 2350 Nm at 900-1125 rpm.; Exhaust emission Euro 6; Eco fuel; 12-speed TraXon 12TX2210 DD, 16.69-1.00; Gearbox ratio 16.69-1.00; Rear axle ratio 2.38.

Optional

07110 Eco performance
02314 Gearbox overdrive
07101 Standard transport, Lite version
09636 Heavy haulage
09637 Liquid transport
08371 Long Combination Vehicle (LCV)
09638 Off-road applications
01498 Off-road applications with Rock-free function
02843 Mechanical differential lock

BRAKE SYSTEM

MX Engine Brake; Ventilated disc brakes front and rear. Dual circuit air system with electronic control (EBS).Engine driven, water cooled aire compressor with automatic air h eated dryer..

Optional

02715 ZF Intarder
01572 Park brake control electro -pneumatic
01497 Park brake control pneumatic with spoken warning
04901 Spring brake cylinders on the first front axle
00929 Driven rear axle with drum brakes

CHASSIS

Wheelbase 4.60 m / rear overhang 2.55 m; Side member height 310 mm; Standard component location; 340 l alu fuel tank LH, height 620 mm; Tank for AdBlue® 45 l, left-hand side chassis; Front underrun protection (FUP); Spray suppression.

016F0329NBAA - 202545A - 10-07-2025

Optional

02393 Side member height 260 mm

16157 Fuel tanks, material and sizes

07071 Spare wheel carrier right-hand side

03322 Rear light with bulbs

DRAWBAR AND TRAILER EQUIPMENT

D-value cross member D=13.7; Pneumatic trailer connection C-type; Electric connection 24 V / 2x7 pins.

Optional

07033 Trailer coupling Ringfeder D=13.7 B

07034 Trailer coupling Ringfeder D=20.0 B

08026 Trailer coupling Rockinger D=13.0 B

08027 Trailer coupling Rockinger D=20.0 B

04659 Trailer cable EBS

BODIES AND PREPARATIONS FOR BODYING

Application connector chassis.

Optional

09421 Additional spare wiring

09201 Chassis preparation for BDF

09208 Chassis preparation for BDF Multi system

08121 Tail lift application

POWER TAKE-OFF (PTO)

Optional

16148 PTO types and positions

24V POWER SUPPLY

Alternator 130 A, batteries 2x 210 Ah AGM..

Optional

08775 Alternator 150 A

06440 Batteries 2x230Ah

GVM AND GCM

Chassis weight related technical GVM max 27000 kg; Driveline related max GCM 44000 kg class 2.

APPLICATION CONDITIONS

Air intake front.

Optional

08400 Silent mode

06614 Anti-dust blow-up shield

06620 Anti-dust blow-up shield + bugscreen

SERVICE AND MAINTENANCE

Standard Warranty takes care of 1 year complete vehicle as supplied by the OEM (excl. real wear parts), 2nd year driveline and 1st year breakdown.; ITS service.

Optional

08311 Service interval extended

VEHICLE DELIVERY

Minimum toolkit.

Optional

07569 Lifting jack

OPTION PACKAGES

Optional

17448 Safety pack

17596 Executive Pack XG/XG+

17625 Climate Pack

Go to DAF.com to configure your own perfect DAF.

016F0329NBAA - 202545A - 10-07-2025

XG+ 450

FAN 6X2 Rigid

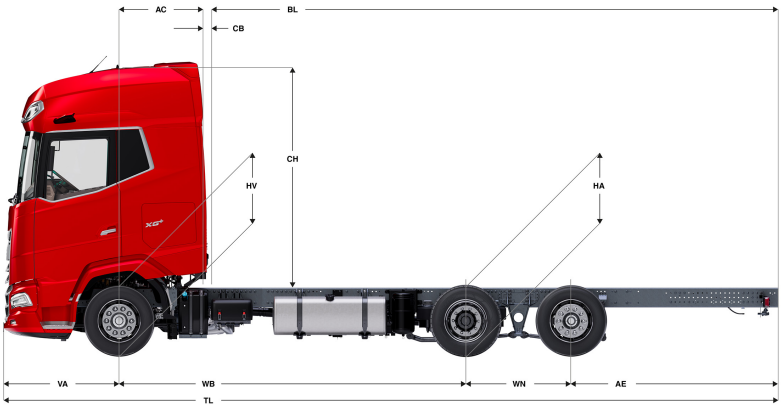

	Wheelbase - AE		Unladen weight[4]			Gross Carrying Capacity			Variable dimensions									
	WB	AE[5]	Front	Rear	Total	Front	Rear	Total	AC	CB[6]	CH	BL[7]	BL	TL	HA[8]	HA[9]	TK [10]	TW[11]
XG+ CAB	4,60	2,55	5154	3592	8746	2846	15408	17254	1,16	0,08	2,95	6,19	6,19	10,08	1,02	0,99	15,57	16,99
	4,80	2,70	5148	3628	8776	2852	15372	17224	1,16	0,08	2,95	6,52	6,52	10,43	1,02	0,99	16,09	17,52
	5,05	2,90	5129	3644	8773	2871	15356	17227	1,16	0,08	2,95	6,93	6,93	10,88	1,02	0,99	16,74	18,18
	5,30	3,15	5119	3692	8811	2881	15308	17189	1,16	0,08	2,95	7,34	7,34	11,38	1,02	0,99	17,40	18,84
	5,60	3,15	5073	3570	8643	2927	15430	17357	1,16	0,08	2,95	7,83	7,83	11,68	1,02	0,99	18,18	19,64
	6,10	2,90	5196	3749	8945	2804	15251	17055	1,16	0,08	2,95	8,71	8,71	11,93	1,02	0,99	19,49	20,96

OTHER DIMENSIONS VA: 1,53 WN: 1,40 HV[12]: 1,02 HV[13]: 0,99 RB: 0,79 SB: 1,82 TB[14]: 2,48

1) GVM in conformity with registration documents.
2) GCM in conformity with registration documents.
3) Axle load with standard tyre size.
4) Chassis and cab weight calculated with: Standard specification items only with 340 litres of fuel, 45 litres of AdBlue® and driver of 90 kg, tolerance ± 3%. Changing of the specification can have major impact on vehicle weight.
5) Other AE dimensions may be available for shown WB. Modify rear overhang to the calculated body length.
6) CB is based on standard air intake and/or exhaust.
7) Calculate customer specific body length with TOPEC. Body lengths shown based on evenly distributed load at max axle load.
8) Unladen height at centre of driven axle (trailing axle down).
9) Laden height at centre of driven axle(s).
10) TK = turning circle between kerbs.
11) TW = turning circle between walls.
12) Unladen height at centre of front axle(s).
13) Laden height at centre of front axle(s).
14) TB is overall width at rear. (At centre of front axle 255).

Depending on the vehicle configuration a specific option may not be possible. The availability and specification of this vehicle may differ per country. For further information please contact the DAF organisation. Pictures and technical illustrations are not binding in detail and can differ from the standard specification. Subject to modification without prior notice.

016F0329NBAA - 202545A - 10-07-2025